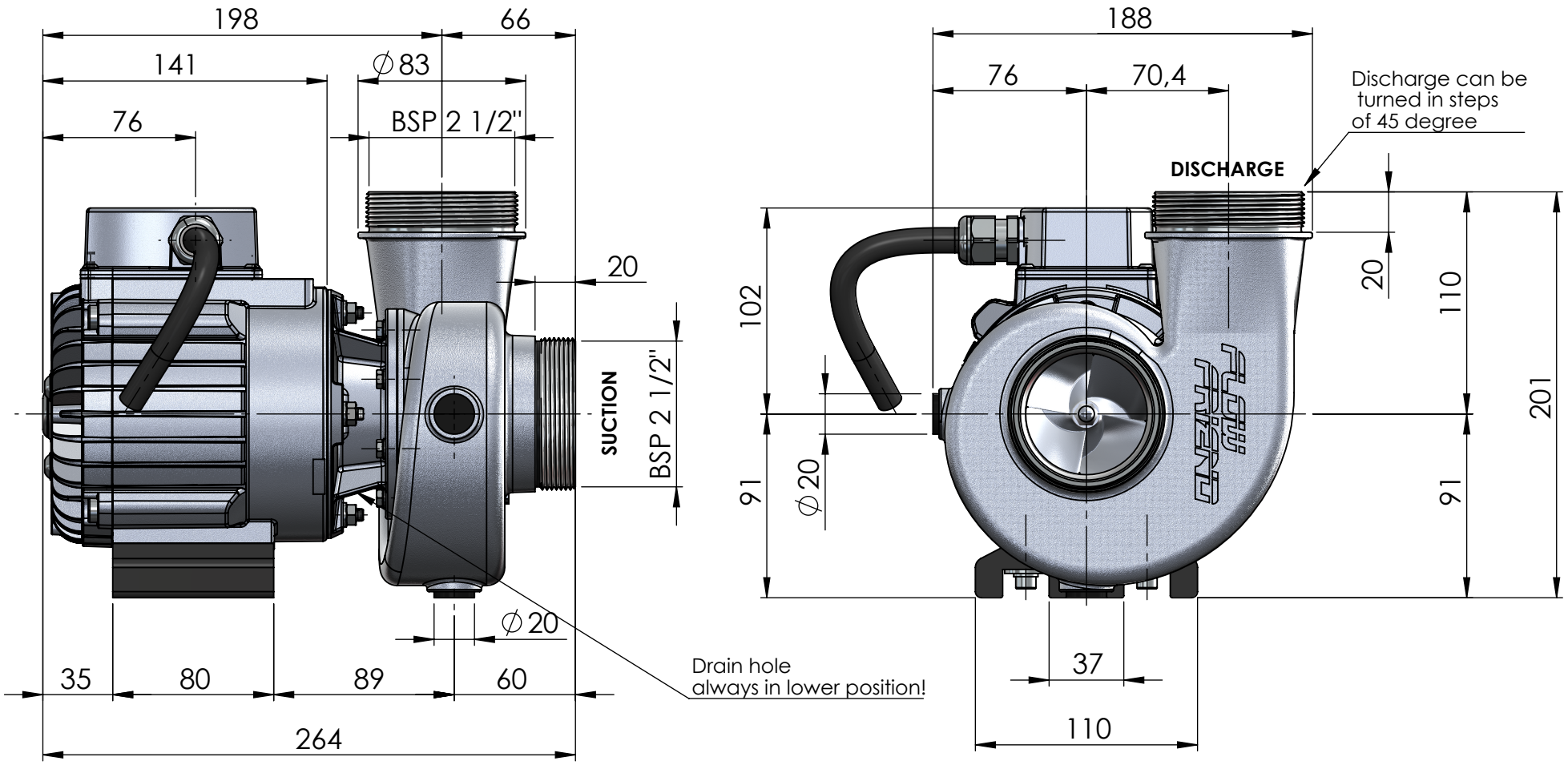
198
66
141
∅83
76
BSP 2 1/2"
20
SUCTION
BSP 2 1/2"
∅20
35
80
89
60
264
Drain hole
always in lower position!
188
76
70,4
Discharge can be
turned in steps
of 45 degree
DISCHARGE
102
20
110
201
91
∅20
91
37
110